Towngas Lifestyle | Mia Cucina

抽油煙機
Range Hood

使用說明書
User Instructions

型號 Model



TRHM701DSA

目錄

重要安全指示 ..... 第 1 頁

部件名稱與外型尺寸 ..... 第 3 頁

安裝附件 ..... 第 4 頁

安裝指引 ..... 第 5 頁

安裝程序 ..... 第 6 頁

使用方法 ..... 第 8 頁

日常保養 ..... 第 9 頁

故障處理 ..... 第 10 頁

接線圖 ..... 第 11 頁

規格 ..... 第 11 頁

安裝指示中的圖片僅供參考用

重要安全指示

感謝您選用 Mia Cucina 產品，如有任何有關使用及維修的查詢，請致電 24 小時客戶服務熱線 2880 6988。

請遵守以下安全指示，以確保抽油煙機安全及有效運作。

1. 請遵守本說明書所載的指示。
2. 妥善保存本手冊以便日後作參考。在出售或轉移安裝時，請確保手冊與產品在一起。
3. 請仔細閱讀說明：其中有關於安裝、使用和安全的重要資訊。
4. 當拆洗濾集油盤時，請勿開機使用。
5. 當同時使用煮食爐時，本抽油煙機的可接觸部件可能會發熱。
6. 除非有人在旁監督或提供指導，切勿讓兒童、殘障、智障或缺乏相關經驗和知識的人士使用本機。
7. 本油煙機乃設計予成人使用，切勿任由兒童把玩或觸碰控制部分。
8. 更換照明燈、清潔、維修或拆洗除油煙機前，必須先切斷電源。
9. 除特別說明，切勿將油煙機作支承用途。
10. 必須由合資格人員安裝及維修本機。
11. 切勿用水直接沖洗抽油煙機，以免引致漏電或損壞馬達。
12. 切勿使用強酸或強鹼之清潔劑清洗集油盤及機體。
13. 當清潔集油盤及機體，應穿上手套保護雙手，避免割傷。
14. 當抽油煙機與燃氣或其他燃料爐具同時使用時，房間必須通風良好。
15. 請依照說明書指示清潔抽油煙機，以避免發生火警。
16. 切勿在鍋中燃火，以免燒壞抽油煙機。
17. 由於食油在高熱下會有搶火現象，在進行油炸時應小心，避免油溫過熱。
18. 避免讓抽油煙機下方有爐火空燒，以免高溫損壞爐具。
19. 排放油煙時，請遵守當地有關的技術及安全條例的規定。

20. 抽油煙機的排氣不可排放到燃氣或其他燃料爐具的排氣管道。

21. 若電源線損壞，須由生產商、其服務代理商、或具備同樣資格的維修人員進行更換，以免發生危險。

22. 切勿弄濕抽油煙機內部電氣部件。

23. 抽油煙機的供電位必須連接地線。

部件名稱與外型尺寸

部件名稱

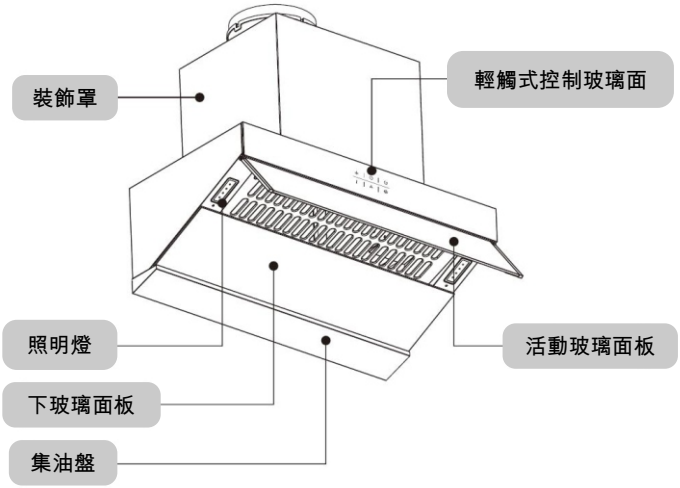

外形尺寸

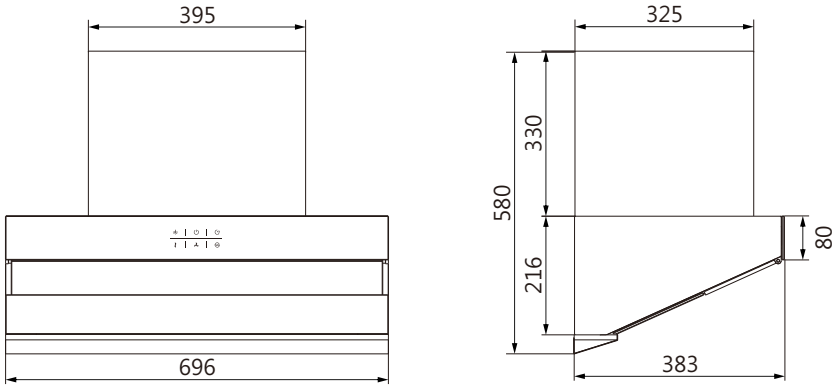

單位：毫米

安裝附件

附件	數量
說明書	1 本
集油盤	1 個
掛板(上掛板，下掛板，3 顆螺栓，3 顆螺母)	1 套
排氣管箍	1 件
牆栓	6 顆
M5 x 50 自攻螺絲	6 顆

附件	數量
出風口組件	1 套
M4 x 8 螺絲	2 顆
掛板安裝模板	1 張
裝飾罩 (內外)	1 套
裝飾罩安裝支架 (連 2 顆 M4 x 10 螺絲)	1 套
裝飾罩安裝模板	1 張

掛板安裝及螺絲位置

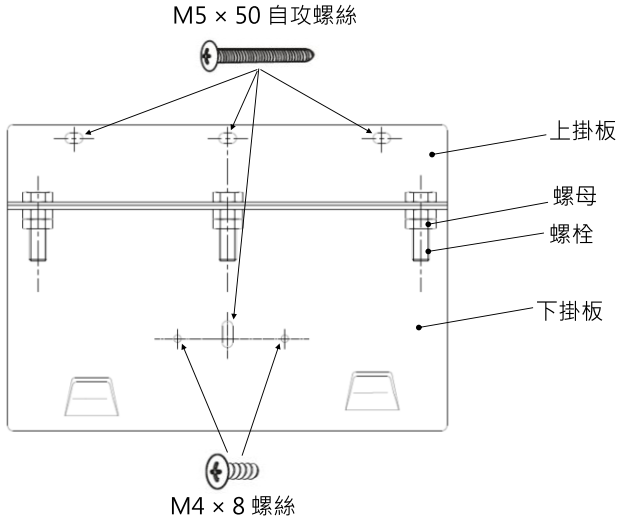

安裝指引

1. 必須由符合資格人員安裝抽油煙機。
2. 安裝前請檢查產品，如有缺損，切勿安裝及與銷售商聯絡。
3. 搬運、安裝器具時，請戴手套，以防割傷。
4. 確保電源供應為 220 伏/50 赫，供電插座符合 BS1363 標準，插座應提供開關按鈕。
5. 請勿將機體嵌入牆內。
6. 抽油煙機寬度應與煮食爐配合。
7. 請使用不少於 150 毫米直徑的金屬排氣管，否則會影響排氣效果。
8. 煮食爐爐架與抽油煙機最底部位的最少距離應為 650 毫米。如煮食爐爐架要求較大的距離，應採用較大者。
9. 油網在未妥善安裝前，切勿使用油煙機。

安裝程序

1. 打開紙箱檢查附屬配件是否齊全。
2. 安裝前，請檢查抽油煙機的功能是否正常 (如電機運作和照明燈)，嚴禁將手放入抽油煙機內，以免受傷或損壞機件。
3. 確保牆面足夠結實，以支撐抽油煙機的重量。
4. 建議抽油煙機底部距離煮食爐爐架是 455 毫米。
5. 安裝掛板:
   將掛板安裝模板貼到牆壁上，鑽 4 個安裝孔，孔徑 10 毫米，孔深 50 至 60 毫米，放入 4 顆牆栓，以 3 顆自攻螺絲固定掛板。

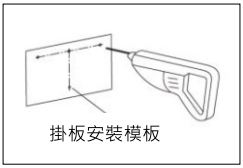
掛板安裝模板

6. 安裝抽油煙機：

   方法一 (上方無櫥櫃)

i. 收緊 3 枚螺栓，將掛板上下兩部份貼緊 (圖 1)，並鎖緊 3 顆防脫螺母。

ii. 將機體掛在掛板上的掛鉤，然後將 2 顆 M4×8 防脫螺絲固定在掛板上的限位孔中，再擰緊 1 顆自攻螺絲在下掛板槽孔。

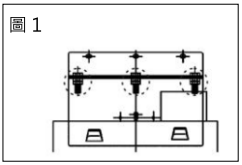
圖 1

   方法二 (櫥櫃下無縫安裝)

i. 將掛板上下兩部份分開約 30 毫米 (圖 2a)，將機體掛在掛板上的掛鉤。

ii. 將 2 顆 M4×8 防脫螺絲固定在下掛板上。

iii. 擰緊左右螺栓升起抽油煙機 (圖 2b)，並貼緊櫥櫃底部。

iv. 將兩邊螺母擰上 (圖 2c)，再將 1 顆自攻螺絲擰緊在下掛板槽孔。

v. 擰緊中間的螺絲 (圖 2d)，再把 3 顆螺母鎖緊 (圖 2e)。

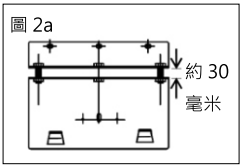

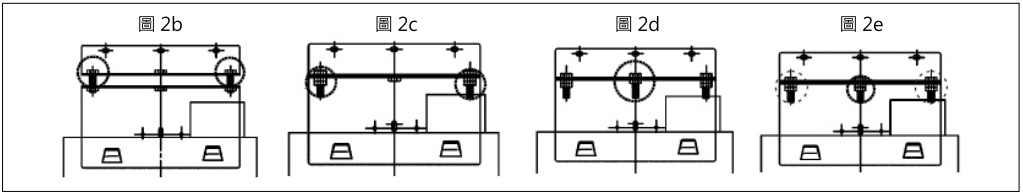

7. 安裝出風口組件 ：

   擰出機體頂部出風口的螺絲，然後以原有螺絲將出風口組件固定在機體上。

7. 安裝排氣管：

   將排氣管以管箍固定在出風口組件上 。

9. 安裝集油盤：

   將集油盤的卡槽對準機體底部的卡鉤，輕輕向前推固定集油盤 。

10. 當安裝裝飾罩時，以安裝模板在牆上鑽出 2 個孔，插入牆栓，然後用 2 顆自攻螺絲固定安裝支架，並用 M4 x 10 防脫螺絲將內裝飾罩固定在支架上。

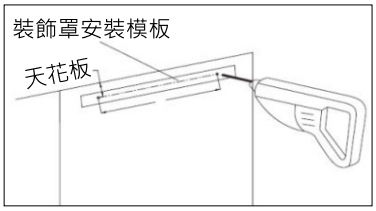

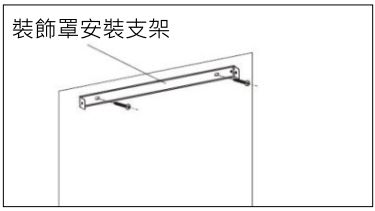

11. 安裝前請將機殼表面之保護膠膜撕掉。

12. 將電插頭插入電插座。

操作面板

開啟電源後，所有指示燈亮著 1 秒後，指示燈均熄滅，表示進入關機狀態。

電源鍵 [⏻]

①在關機狀態，輕觸此鍵進入啟動狀態，活動玻璃面板打開，抽油煙機會以上次關機前的風速和照明燈設定運作。

②在運作狀態下（風機運行或照明狀態下，包括延時），按一下此鍵，進入關機狀態，活動玻璃面板關閉，風機和照明燈都關閉。

爆炒鍵 [Turbo]

在運作狀態下，輕觸此鍵進入爆炒模式，此指示燈閃亮，持續爆炒模式 5 分鐘後，自動切換到高速模式。

高速鍵 [🌀]

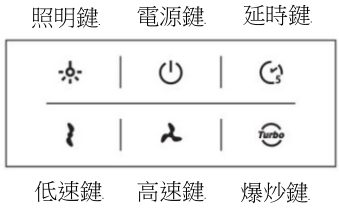

在運作狀態下，輕觸此鍵進入高速模式，指示燈長亮，風機高速運轉。

低速鍵 [≀]

在運作狀態下，輕觸此鍵進入低速模式，指示燈長亮，風機低速運轉。

照明鍵 [☼]

在待機或運作狀態下，輕觸此鍵開啟照明燈，指示燈長亮，再按關閉照明燈，指示燈熄滅。

延時鍵「 5 」

在運作狀態下，輕觸此鍵，此鍵指示燈閃亮，表示進入 5 分鐘延時關機狀態，風機切換到低速，5 分鐘後自動關閉風機，進入待機狀態。

日常保養

若有需要清潔抽油煙機或油網，應穿上手套保護雙手，避免割傷。

日常保養重於維修：

- 為發揮本機最佳性能，延長其使用壽命，應經常注意保養。
- 保養維修前，應先關閉電源。

常保持抽油煙機外部潔淨：

使用後請用乾布或沾有中性清潔劑之抹布，擦拭機體外殼及裝飾罩，經常清潔以保持其美觀及觸控面板的感應度。 雙手托住集油盤，慢慢拉出，清理油污後，再放回。

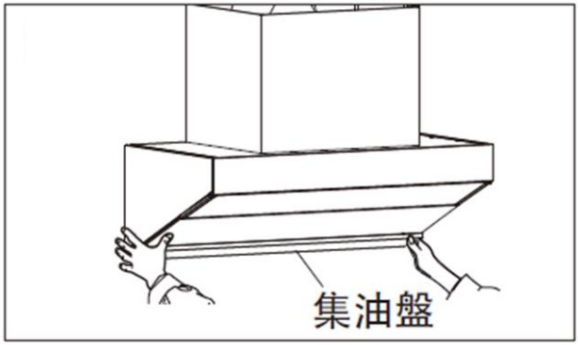

故障處理

當發生故障時，請將電源關掉，10 秒後再重啓電源。若問題持續，關閉電源，並致電 24 小時客戶服務熱線 2880 6988。

故障	可能原因	處理方法
照明燈和風機均不運作	電源未開啟	開啟電源
	保險絲熔斷	聯絡客戶服務
	部件鬆動	
	觸控玻璃面板損壞	
風機運作但照明燈不亮	照明燈損壞	
	照明燈的變壓器損壞	
	觸控玻璃面板損壞	
風機不運作但照明燈亮起	葉輪被卡著	
	風機高溫保護啟動	稍候片刻再啟動
	電容器損壞	聯絡客戶服務
	風機損壞	
	觸控玻璃面板損壞	
機體震動大或有異常響聲	固定機體螺絲鬆動	
	葉輪變形	

接線圖

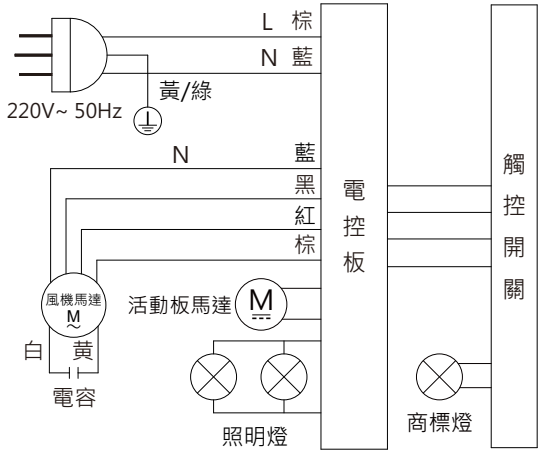

規格

型號	TRHM701DSA
淨重量（公斤）	21.5
機體尺寸（毫米）（闊 x 高 x 深） （不連出風口組件）	696 x 250 x 383
機體連伸縮罩高度（毫米）	680 - 850
額定電壓及頻率	交流電 220-240 伏特 / 50 赫
出風口直徑（毫米）	150
照明（瓦）	2 x 2W LED 燈
馬達轉速（轉數 / 分鐘）	1016 | 910 | 716
排風量（立方米 / 分鐘）	19.5 | 17.3 | 13.2
額定總功率（瓦）	264

Table of Contents

Important Safety Instructions …….. P. 1

Part Descriptions and Dimensions ……. P. 3

Installation Accessories ……... P. 4

Installation Guidelines …….. P. 5

Installation Procedures ……. P. 6

Operating Instructions …….. P. 8

Daily Maintenance ……. P. 9

Troubleshooting ..... P. 10

Wiring Diagram ..... P. 11

Specifications ..... P. 11

Figures in installation instructions are for reference only

Important Safety Instructions

Thank you for choosing Mia Cucina products. Should you have any enquiries about operation and maintenance, please call 24-hour Customer Service Hotline 2880 6988.

Please observe the following instructions for safe and efficient operation of range hood.

1. Closely follow the instructions set out in this manual.
2. It is important to conserve this booklet for consultation at any moment. In the case of safe, cession or move, make sure that it is together with the product.
3. Read the instructions carefully: there is important information about installation, use and safety.
4. Do not turn on the range hood when the grease collector is removed or cleaning.
5. When cooking appliance is in use, accessible parts of the range hood may become hot.
6. This appliance is not to be used by children or persons with impaired physical, sensorial or mental faculties, or if lacking in experience or knowledge, unless they have been given supervision or instruction concerning use of the appliance by a person responsible for their safety.
7. The appliance is designed to be operated by adults, children should be monitored to ensure that they do not play with the appliance.
8. Disconnect the power supply before replacing the lamp, cleaning, repairing or dismantling the range hood.
9. The hood must NEVER be used as a support surface unless specifically indicated.
10. Installation and maintenance of appliance must be undertaken by qualified persons.
11. Do not splash water onto the range hood. It may cause electric leakage or motor damaging.
12. Do not use strong acid or strong alkaline detergent to clean the grease collector and casing.
13. When cleaning the grease collector and casing, wear gloves to protect the hands from cut injury.
14. There shall be adequate ventilation of the room when the range hood is used simultaneously with appliances burning gas or other fuels.
15. There may be a fire risk if cleaning is not carried out in accordance with the instructions.
16. Take particular care to prevent oil and grease inside cooking pots from catching fire, which may damage the range hood.
17. Any frying must be done with care in order to make sure that the oil does not overheat and ignite.
18. Avoid naked flame under range hood to prevent damage of machine by high temperature.
19. With regards to the technical and safety measures to be adopted for fume discharging, it is important to closely follow the regulations provided by the local authorities.

20. The exhaust air must not be discharged into venting pipe for exhausting fumes from appliances burning gas or other fuels.
21. If the power cord is damaged, it must be replaced by the manufacturer, its service agent or similarly qualified persons in order to avoid a hazard.
22. Do not wet the internal electrical components of the range hood.
23. Power point of range hood must be earthed.

Part Descriptions and Dimensions

Part Descriptions

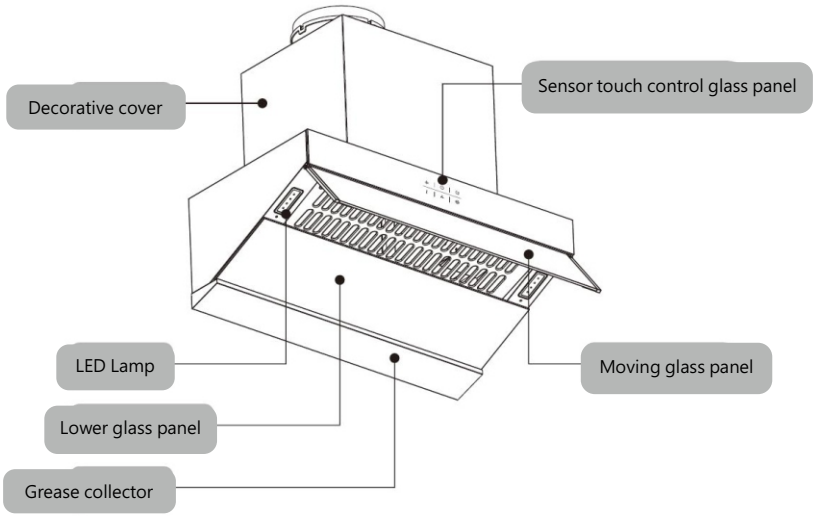

Dimensions

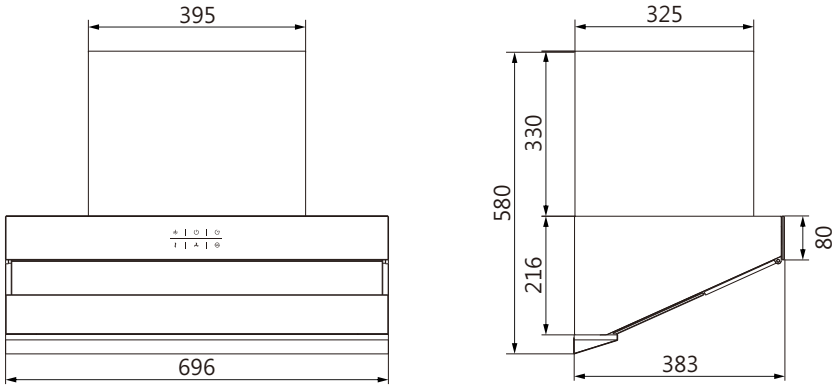

Unit : mm

Installation Accessories

Accessories	Qty
User instructions	1 pc
Grease collector	1 pc
Fixing bracket (upper bracket, lower bracket, 3 bolts, 3 nuts)	1 set
Pipe Clamp	1 pc
Wall plug	6 pcs
M5 x 50 self-tapping screw	6 pcs

Accessories	Qty
Pipe Set	1 Set
M4 x 8 screw	2 pcs
Fixing bracket template	1 pc
Decorative cover (inner and outer)	1 set
Decorative cover bracket (with 2 M4 x 10 screws)	1 set
Decorative cover template	1 pc

Fixing Bracket and Screw Position

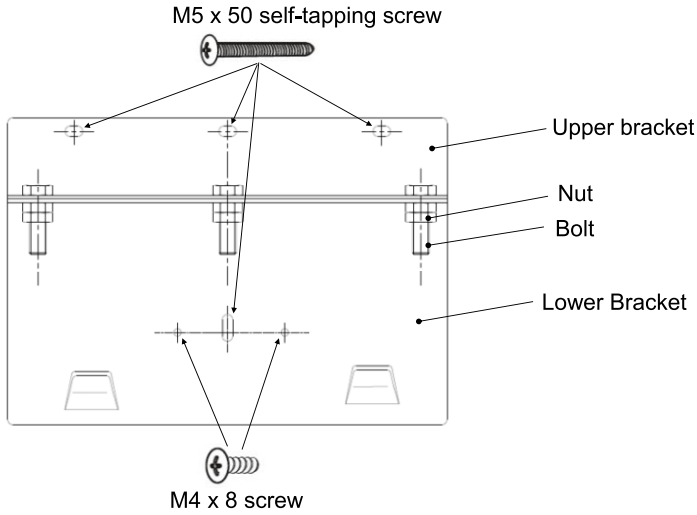

Installation Guidelines

1. Range hood must be installed by qualified person.
2. Before proceeding with the installation of the appliance, verify that there are no damaged components. Otherwise contact your dealer and do not proceed with the installation.
3. While moving and installing the range hood, please wear gloves to prevent cutting.
4. Ensure power supply is 220V, 50Hz. Power socket shall conform to BS1363 and should be equipped with switch.
5. Do not embed the range hood into wall.
6. Width of range hood should match with cooking hob.
7. Please use metallic venting pipe with diameter not less than 150mm; otherwise exhausting performance will be affected.
8. The minimum distance between pan support of cooking hob and bottom of range hood is 650mm. If cooking hob requires larger distance, adapt the larger value.
9. Never use the hood without effectively mounted filter.

Installation Procedures

1. Unbox and check operating instructions and completeness of accessories.
2. Before installation, please check if the range hood is functioning well (e.g. motor operation and LED lamp). Do not put your hand inside the range hood to prevent hazard and fan damage.
3. Make sure the wall is strong enough to support the weight of range hood.
4. The suggested distance between bottom of range hood and pan support of cooking hob should be 455mm.
5. Bracket installation:

   Place the fixing bracket template on the wall. Drill 4 holes, with 10mm diameter and 50 - 60mm depth for each hole. Insert 4 wall plugs and use 3 self-tapping screws to secure the bracket.

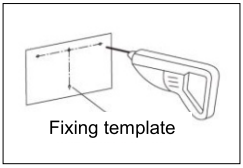
Fixing template

6. Range hood installation:

   Method 1 (Without Cabinet above)

i. Tighten the 3 bolts to move upper and lower brackets together, and tighten the 3 lock nuts (Fig. 1).

ii. Hang the range hood and avoid slipping off the hook with 2 M4 x 8 screws. Finally, screw the self-tapping screw at the slot opening of lower bracket.

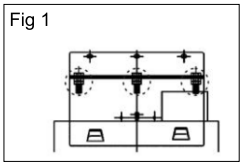
Fig 1

   Method 2 (Seamless installation below cabinet)

i. Split the upper and lower brackets with 30mm gap (Fig 2a) and hang the range hood on it.
ii. Fix 2 M4 x 8 screws at lower bracket.
iii. Tighten 2 side bolts to lift up the range hood and touch the cabinet firmly (Fig 2b).
iv. Screw in 2 side nuts (Fig 2c). Fix the self-tapping screw at the slot opening of lower bracket.
v. Lastly, screw the middle bolt (Fig 2d) and tighten all the nuts (Fig 2e).

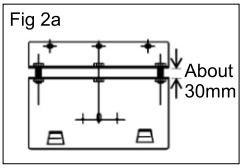

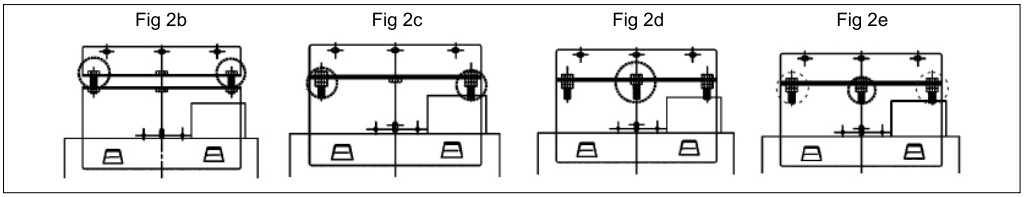

Installation Procedures

7. Installing pipe set
   Unscrew the screws next to the exhaust on top of the range hood. Install the pipe set with those screws.
8. Installing venting pipe :
   Secure the venting pipe on the pipe set with pipe clamp.
9. Installing the grease collector :
   Locate the grease collector at the hooks at the bottom of the range hood. Push forward gently to secure the grease collector .
10. When fixing the decorative cover, use decorative cover template to drill 2 holes on wall and insert wall plugs. Fix the decorative cover bracket on wall with self-tapping screws and fix the inner decorative cover at the bracket with M4 x 10 screws.

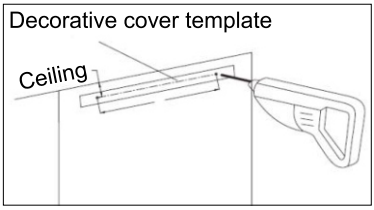

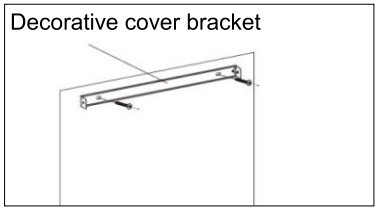

11. Remove the plastic protection sheet before inserting the decorative cover.
12. Plug in the socket.

Control Pane

Once powered, all buttons light up for 1 second. Afterwards, all buttons go off and the range hood enters OFF mode.

Power button [⏻]

① At OFF mode, press to enter activate mode, the moving glass panel will open. Range hood will operate at the same fan speed and lamp setting before it was turned off last time.

② When operating (fan motor operating or lamp is on, including delay off), press once to enter OFF mode. Moving glass panel will retract. Fan and lamp will also be turned off.

Turbo button [Turbo]

When operating, press this button to enter Turbo mode and the indicator keep flashing. After 5 minutes, range hood will change to High Speed mode.

High Speed button [ ]

When operating, press this button to enter High Speed mode and the indicator lights up.

Low Speed button [ ]

When operating, press this button to enter Low Speed mode and the indicator lights up.

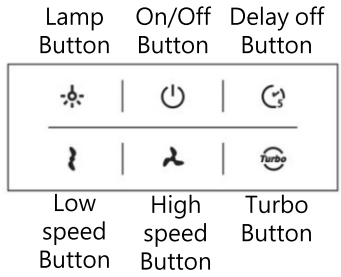

Lamp button [ ]

When operating, press this button to turn on the lamps and the indicator lights up. Press the button again to turn off the lamps.

Delay off button [ ]

When operating, indicator lamp will blink when pressed. It enters 5 minutes delay off mode and fan switches to low speed. Fan stops automatically and it enters stand-by mode after 5 minutes.

Daily Maintenance

While cleaning the range hood or filters, gloves should be worn to avoid cut injury.
Daily maintenances are important:

- To ensure the best performance and prolong the service life of range hood, regular maintenance should be practiced.
- Turn off the power supply before maintenance service.

Keep the range hood clean
Use dry cloth or cloth with mild detergent to wipe the casing, filter and decorative cover. Clean regularly to keep the range hood clean and keep the sensitivity of button and sensor normal.
Use both hands to pull out the grease collector slowly. Put it back after removal of grease .

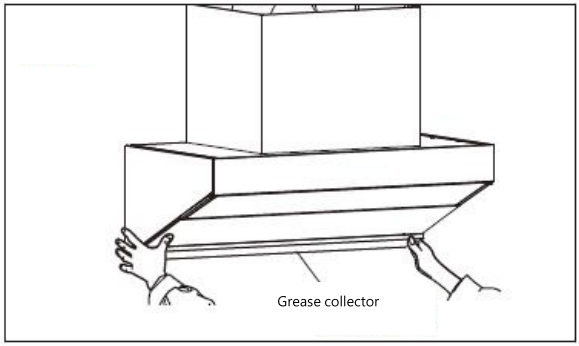

Troubleshooting

When error occurs, please turn off the power supply and restart it after 10 seconds. If problem persists, turn off the power supply and call 24-hour Customer Service Hotline 2880 6988.

Error	Possible reasons of error	Solutions
Both lamp and fan are malfunctioning	Power is off	Turn on the range hood
	Broken fuse	Contact customer service.
	Loosened parts	
	Broken touch control glass panel	
Fan operation is normal but lamp is malfunctioning	Broken lamp	
	Broken transformer of lamp	
	Broken touch control glass panel	
Fan is malfunctioning but lamp operation is normal	Stuck fan blade	
	Activation of fan overheat protection	Wait for a while and restart again
	Broken capacitor	Contact customer service.
	Broken fan	
	Broken touch control glass panel	
Vigorous vibration or abnormal sound from range hood	Loosened fixing screws	
	Deformed fan blade	

Wiring Diagram

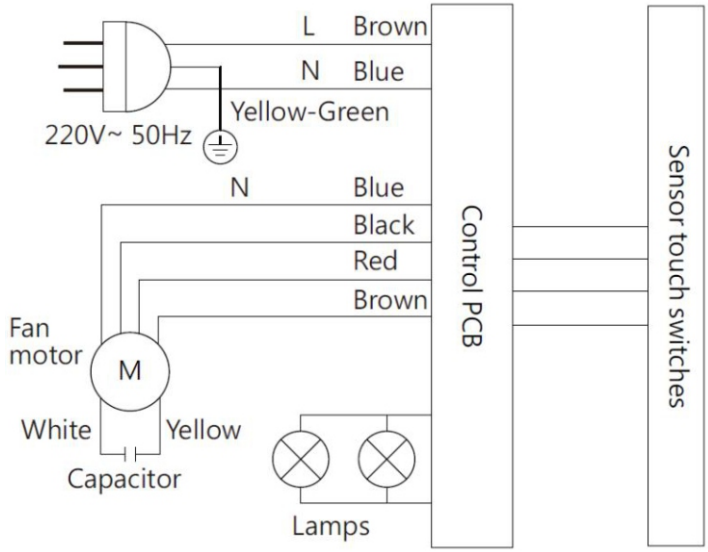

Specifications

Model	TRHM701DSA
Net weight (kg)	21.5
Dimensions (mm) (W x H x D) (Without pipe set)	696 x 250 x 383
Range hood with telescopic cover height (mm)	680 - 850
Rated Voltage and Frequency	AC 220-240V / 50Hz
Diameter of outlet (mm)	150
Rated Lamp power (W)	2 x 2W LED Lamp
Motor speed (RPM)	1016 | 910 | 716
Air flow rate (m^3/min)	19.5 | 17.3 | 13.2
Rated power input (W)	264